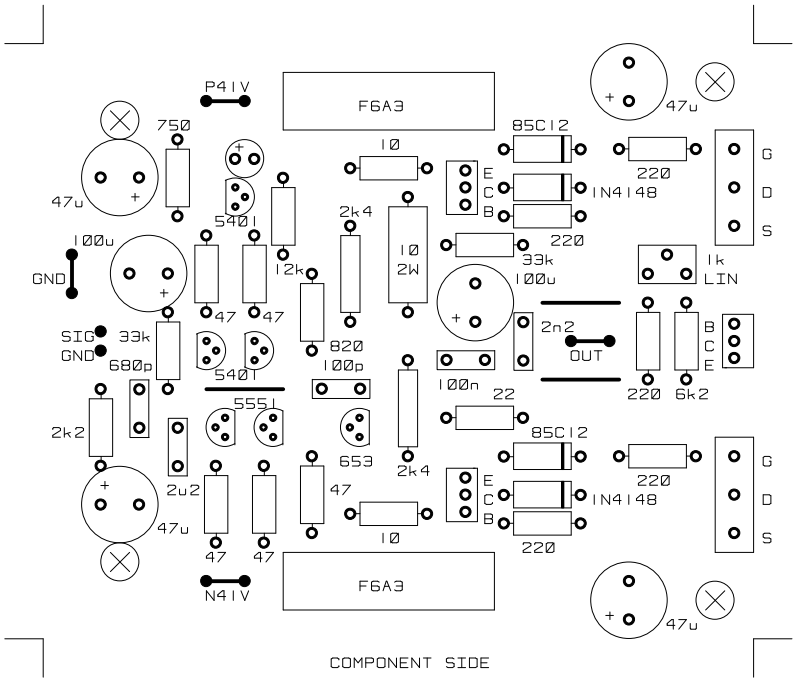


5401 = 2N5401 653 = ZTX653

5551 = 2N5551 85C12 = BZX85C12

Drivers & bias = TIP29C/30C

Outputs = IRFP250