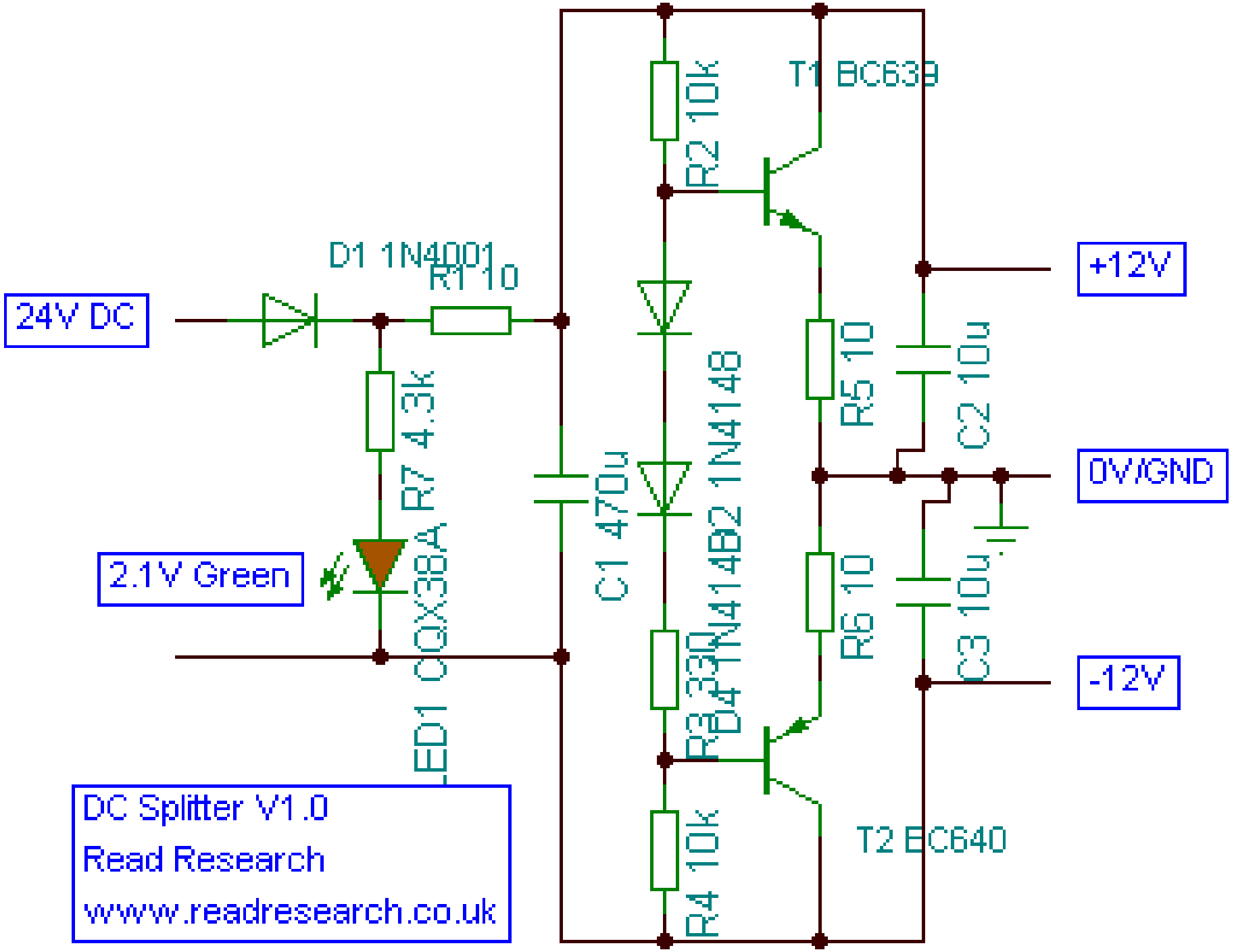
24V DC
D1 1N4001
R1 10
R7 4.3k
2.1V Green
LED1 CQX38A
C1 470u
R2 10k
R3 330
R4 10k
D4 1N4148
D2 1N4148
T1 BC639
T2 BC640
R5 10
R6 10
C2 10u
C3 10u
+12V
0V/GND
-12V
DC Splitter V1.0
Read Research
www.readresearch.co.uk